SIMPLE BOOM (SB-P16, SB-MP16, SB-M24, SB-H)

Description:

The SIMPLEBOOM (SB-P16), (SB-MP16) or (SB-M24) is designed to hold the position of most types of waterblast cleaning nozzles on the end of a straight piece of 1ò pipe, 1" medium pressure tubing or 3/4" pipe with metric M24 male ends. It includes a 24 inch diameter aluminum base plate that is clamped to the manway flange. The SB-P16, SB-MP16 or SB-M24 is useful for line of sight placement of rotary nozzle heads inside tanks and vessels; it can be used anywhere between horizontal and vertical and has a 75Ámaximum range of motion. With the SB-P16, SB-MP16 and SB-M24, the cleaning nozzle can be extended (or retracted) from the vessel to a variety of insertion depths for better cleaning coverage. The maximum insertion depth when mounted horizontally is 9 feet. An aluminum hatchway is provided to view the tool location within the vessel and to check on the cleaning progress. Prior to operating the cleaning nozzle, verify that the hatch is properly secured. The hatch is held in place by (2) rubber tension straps and (2) spring plunger pins.

The SIMPLEBOOM-HOSE (SB-H) is designed to hold and position 3-D type waterblast cleaning nozzles on the end of a İ òor 13mm waterblast hose (Use hose as short as possible to minimize pressure loss). It is useful for placing rotary nozzle heads inside deep tanks and vessels with limited access on the top, as it provides a means of offsetting the tool to the side or end of the vessel. With the SB-H, the cleaning nozzle is suspended on a hose that can be extended (or retracted) within the vessel to a variety of insertion depths for better cleaning coverage. A squeeze collet grips the hose at any desired elevation. The lower extension tube may be attached with a 45Á elbow to the ball, allowing horizontal offsets of the hose from the manway of 10 feet. A tube extension above the ball incorporating anchor loops allows the SB-H to be manually manipulated and secured in position. An aluminum hatchway is provided to view the tool location within the vessel and to check on the cleaning progress. The hatch must be secured in position during operation of the cleaning nozzle.

Operation:

SB-P16, SB-MP16 & SB-M24:

The SB-P16, SB-MP16 or SB-M24 can be assembled with a variety of pipe or tubing lengths to suit the application. The standard length is 8 ft; longer lengths (up to 18 ft) are available. The standard length of the upper pipe or tube is 4 ft to accommodate anchoring to nearby structures and safe body position when manually positioning the ball and tightening the gland. The length of pipe or tube used below the ball is determined by the reach needed to position the cleaning nozzle.

To assemble the SB-P16, SB-MP16 or SB-M24 slide the Collet (SB 150, 151 or 152) onto the pipe or tube that will be inserted into the vessel. Slide the Gland (SB 170) down to the top of the collet. Note that The SB-MP16 or SB-M24 require an extra Gland (SB 170) and Bushing (SB 157 or 155), located at the bottom end of the ball. Next pass the lower pipe or tube end through the Ball. Thread Gland onto the top of the Ball; the collet should grab the pipe or tube when tightened. Slide the Anchor Sleeve (SB 265) onto the upper pipe or tube; note that the SB-MP16 or SB-M24 also require a spacer (SB 267 or 255). Install the upper pipe or tube and coupling to the top of the lower pipe or tube. We recommend using Parker Thread Mate and Teflon Tape on all pipe thread connections, and anti-sieze compound only on medium pressure tubing connections. Install the waterblast nozzle to the bottom end of the lower pipe or tube.

The Baseplate (SB 040) should be securely attached to the vessel manway flange by means of bolts or several large clamps. The pipe lance can be extended into the vessel (or retracted) by loosening the collet with the gland wrench. Once the collet is loosened the pipe lance will slide freely through the ball, so it must be supported by hand. The pivoting/angle function is performed by loosening the Cap (SB 020), pivoting the assembly into the desired position and re-tightening the cap. Four 4òpipe handles are provided to help tighten the cap. A ócheaterô bar may be used to increase leverage on the handles during tightening; when the pipe lance is positioned at an angle other than vertical, the anchor loops on the Anchor Sleeve must be used to hold the ball in position. Attach a chain, come-along, or similar restraint to one or more secure structures nearby. To maximize the stability of the SB-P16, SB-MP16 or SB-M24, keep the anchor attachment in the same plane as the angle of the pipe lance. Make sure all clamps and joints are securely tightened and that the hatch is secured before operation of cleaning nozzles. Always shut down pump before the cleaning head is repositioned.

SB-H:

The SB-H can be assembled with a variety of hose and extension combinations to meet the usersô equipment and the application. The length of the upper extension tube should accommodate anchoring to nearby structures and safe body position when manually positioning the ball, pulling the hose, and tightening the gland. The length of extension tube used below the ball is determined by the reach needed to position the cleaning nozzle. The extension tubes are made from 1-1/2" schedule 40 pipe. In the typical reactor with a center agitator shaft, the extension tube should reach from the center of the manway (6-o-clock position) to the 3-o-clock and to the 9-o-clock area where the nozzle can be lowered beside the agitator blades.

To assemble the SB-H, pass the hose end thru the gland (SB 170), the SB 160 Nipple, SB 060 Anchor Coupling, upper extension tube, GP 052 coupling, and Ball (SB 115). The hose then enters the split end of the SB 120 elbow and passes through the lower extension tube and outlet fitting. Collets are supplied to fit İ òonominal rubber-covered hose and 13-mm plastic covered hose. The collets allow for some variation in hose diameter, but if the gripping ability of the collet is a problem, contact StoneAge. Spread the collet and place around the hose between the Nipple (SB 160) and Gland (SB 170). Thread all 1-1/2" npt pipe connections together securely. Align the lower extension tube with the lower slot in the stem of the ball and tighten the bolt that clamps the split end of the elbow onto the ball to maintain this alignment. This allows the maximum angle to be achieved and gives the operator a visual reference for the lower extension tube orientation (opposite the upper ball slot). Finally, attach the waterblast nozzle to the hose end.

The Baseplate (SB 040) should be securely attached to the vessel manway flange by means of bolts or several large clamps. The pivoting/angle function is performed by loosening the Cap (SB 020), pivoting the assembly into the desired position and re-tightening the cap. Four 4òpipe handles are provided to help tighten the cap. A ócheaterô bar may be used to increase leverage on the handles during tightening. Use the anchor loops on the Anchor Coupling (SB 060) to hold the position of the ball. Attach a chain, come-along, or similar restraint to one or more secure structures nearby. To maximize the stability of the SB-H, keep the lower and upper extension tubes and the anchor attachment in the same plane. Do not let the extension ñflop overò to the left or right when positioning and tightening. The hose can be extended into the vessel (or retracted) by loosening the collet with the gland wrench. Once the collet is loosened the hose will slide freely through the ball, so it must be supported by hand. Make sure all clamps and joints are securely tightened and that the hatch is secured before operation of cleaning nozzles. Always shut down pump before the cleaning head is repositioned.

SB-P16 installed in vessel

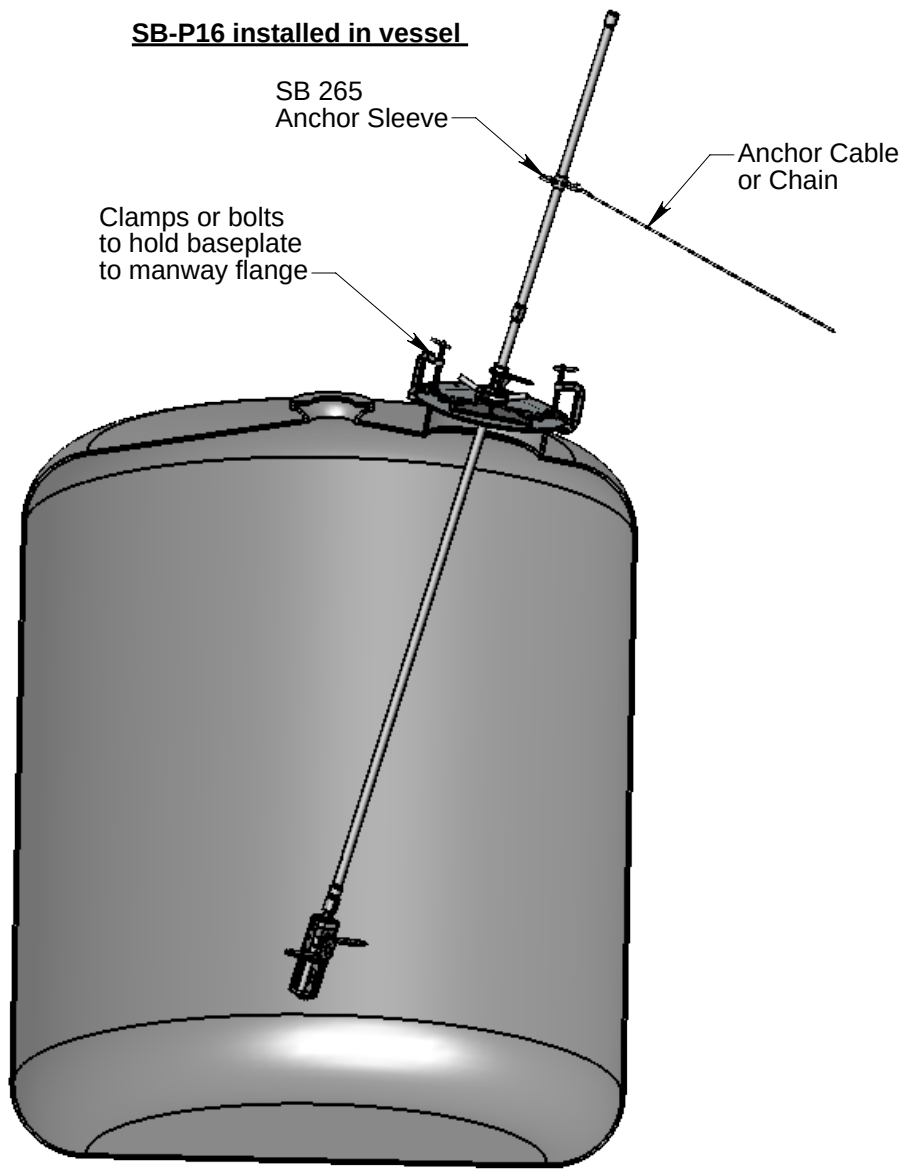

SB-H installed in vessel with offset manway and center agitator

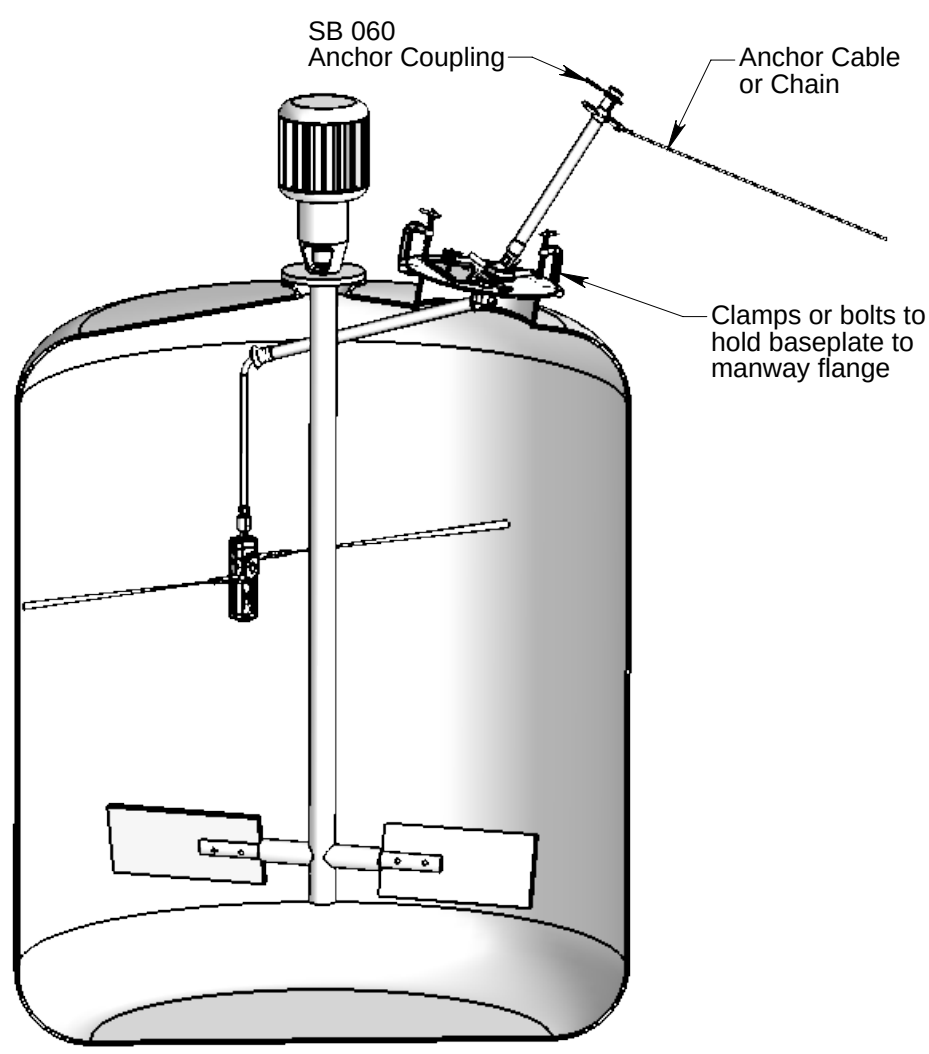

For terms and conditions of sale see: http://www.stoneagetools.com/terms
For limited warranty see: http://www.stoneagetools.com/warranty
For applicable patents see: http://www.sapatents.com

Simpleboom (SB-P16, SB-MP16, SB-M24, SB-H)

SB-P16

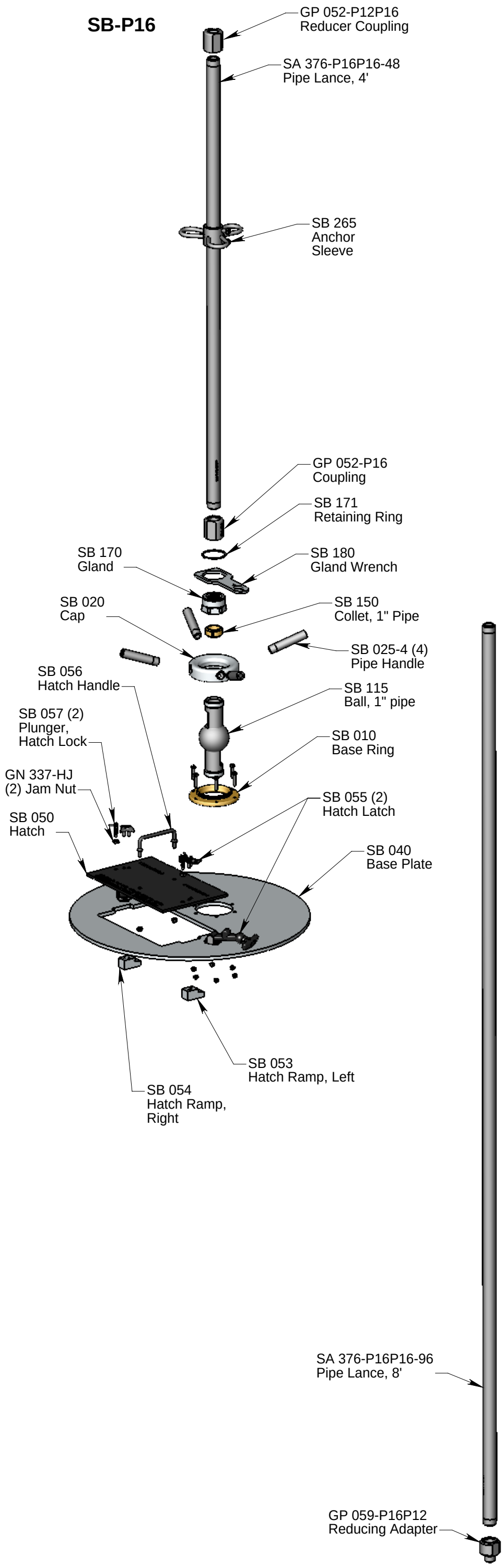

SB-H

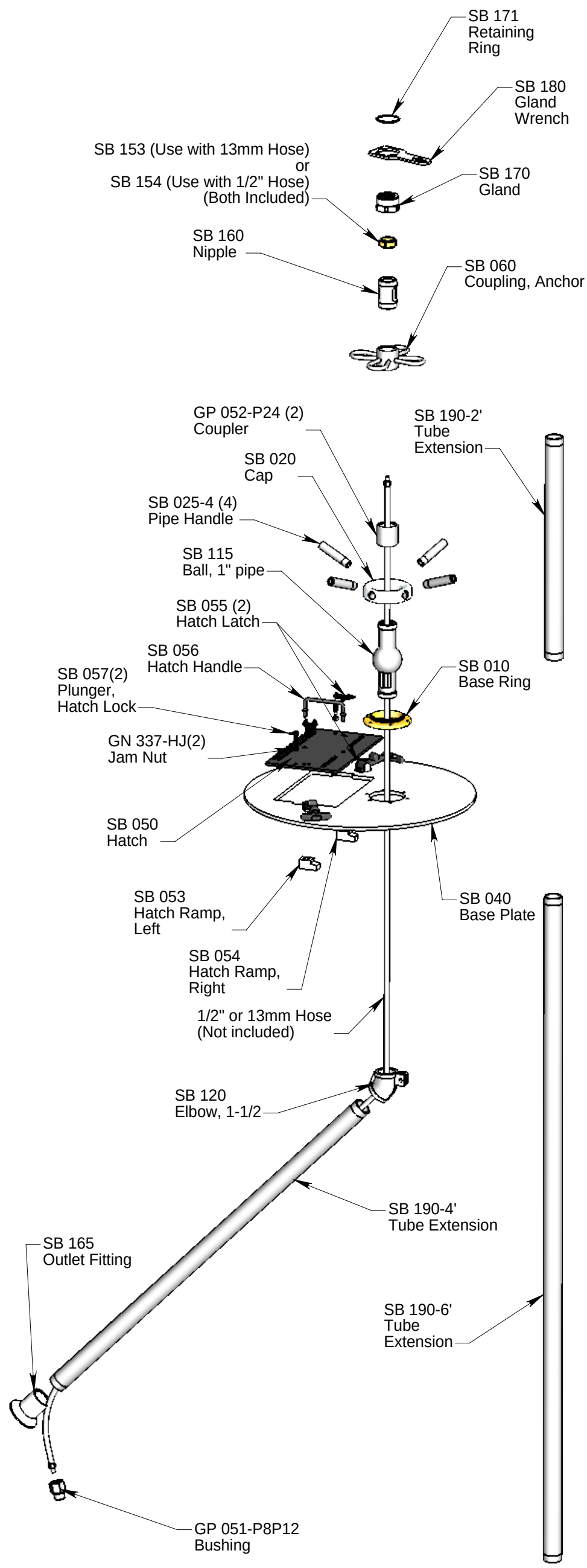

PL 520 É 05/08/2017 StoneAge®, All Rights Reserved

Simpleboom (SB-P16, SB-MP16, SB-M24, SB-H)

SB-MP16

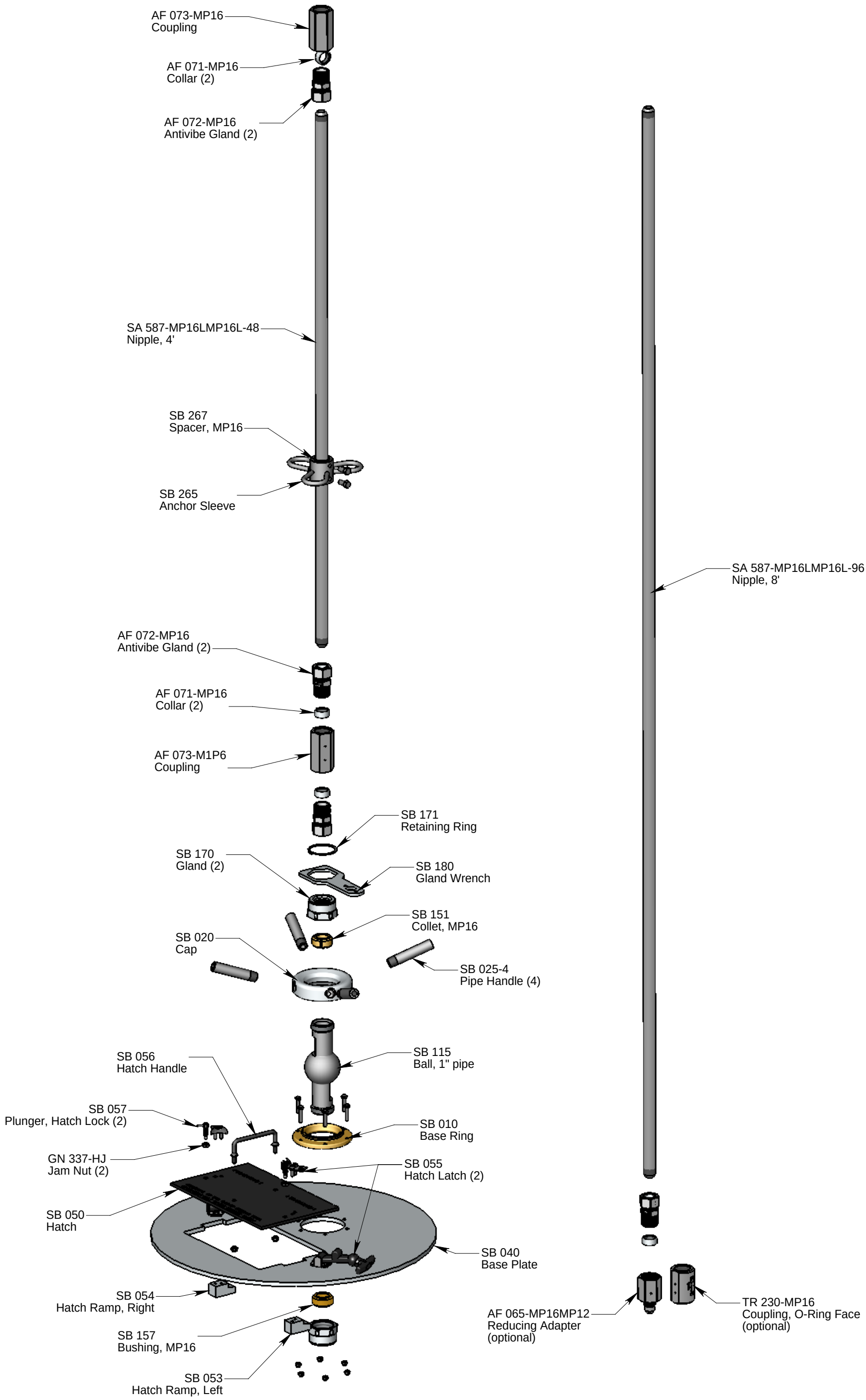

PL 520 É 05/08/2017 StoneAge®, All Rights Reserved

Simpleboom (SB-P16, SB-MP16, SB-M24, SB-H)

SB-M24

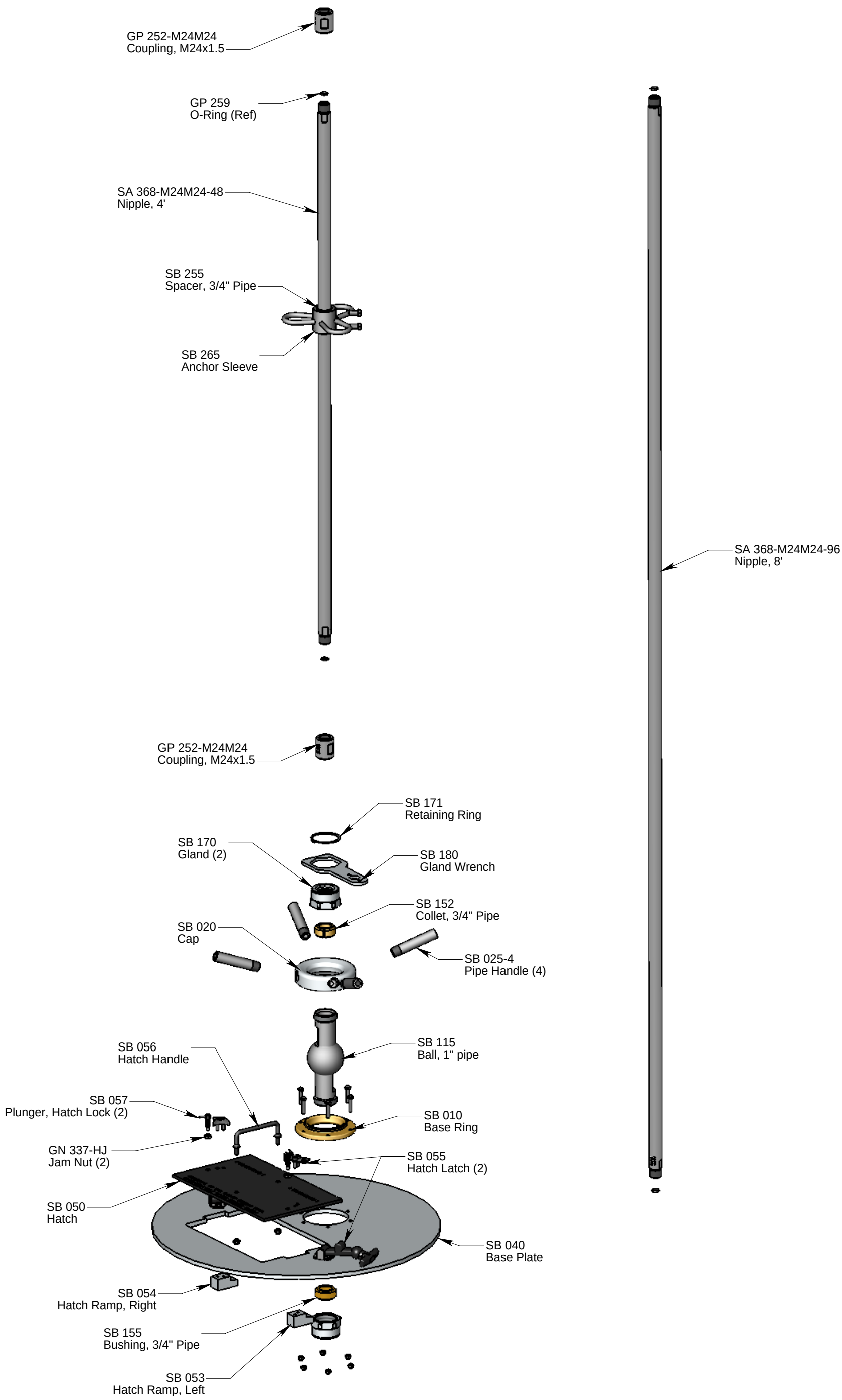

 StoneAge®, All Rights Reserved